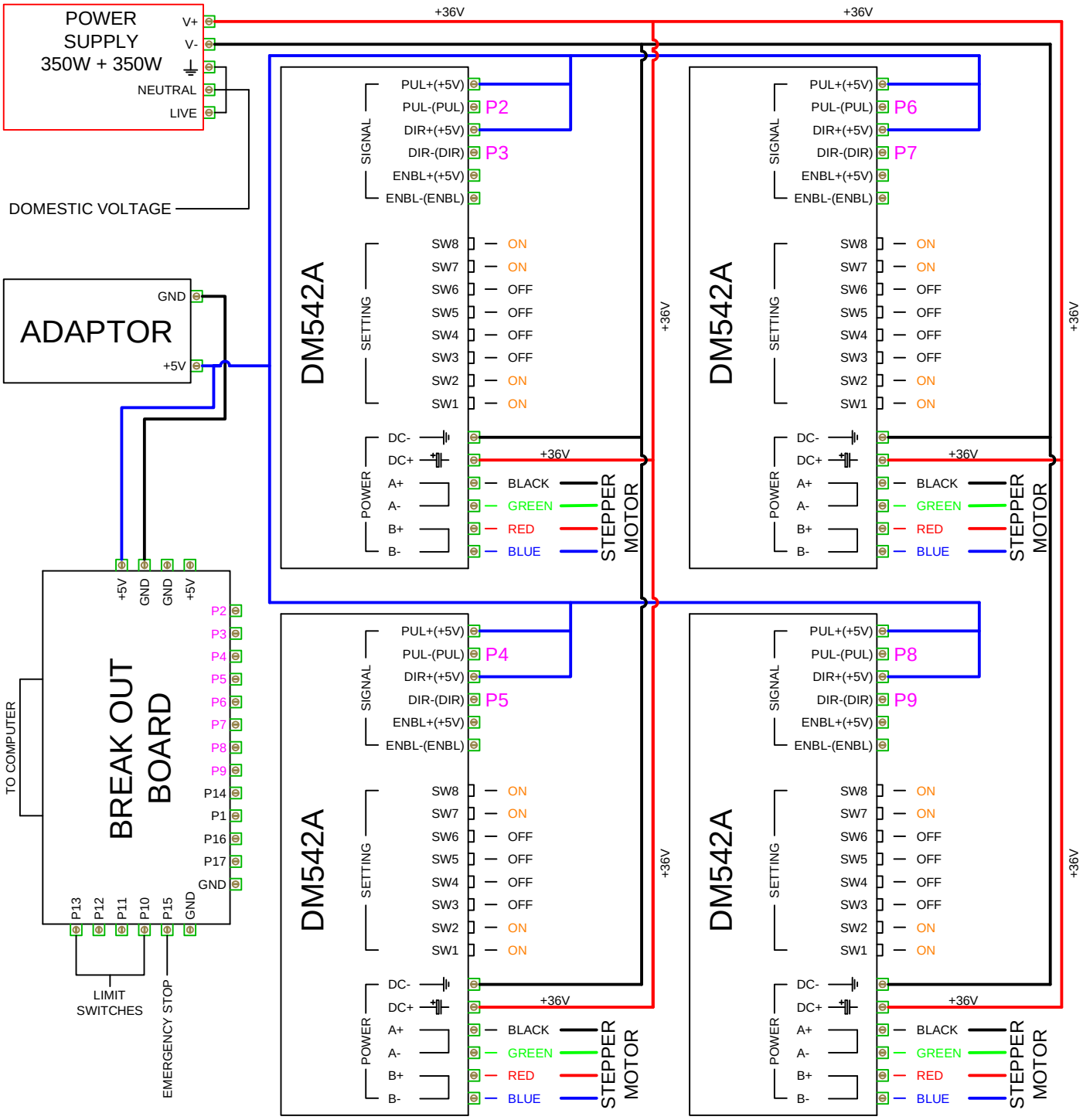

4 - Axis NEMA 23 Wiring Diagram